THIS SCHEMATIC IS FURNISHED ONLY FOR TEST AND MAINTENANCE PURPOSES. THE CIRCUITS ARE PROPRIETARY IN NATURE AND SHOULD BE TREATED ACCORDINGLY.
COPYRIGHT 1967 BY DIGITAL EQUIPMENT CORPORATION

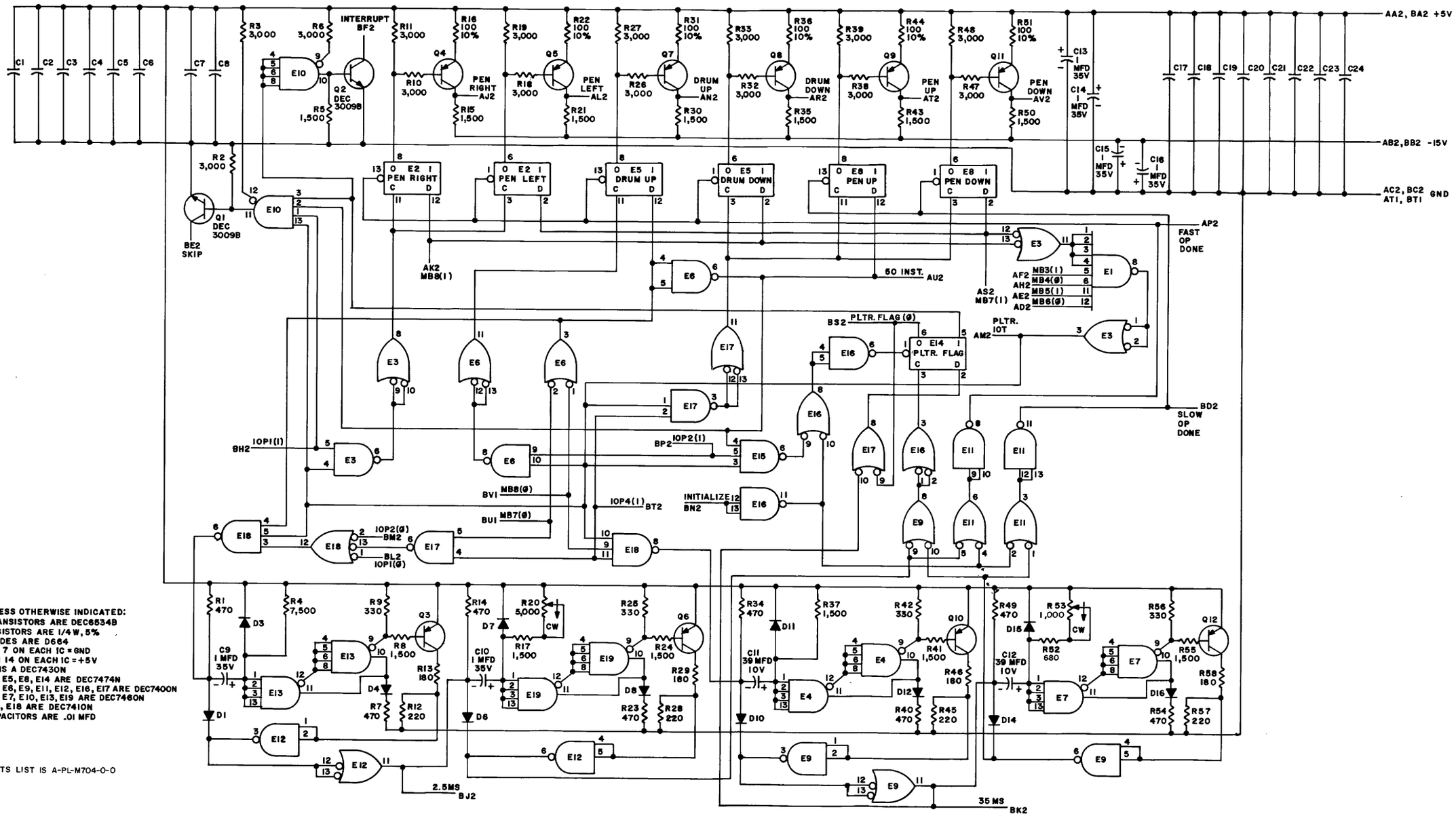

UNLESS OTHERWISE INDICATED:
TRANSISTORS ARE DEC6534B
RESISTORS ARE 1/4 W, 5%
DIODES ARE D664
PIN 7 ON EACH IC = GND
PIN 14 ON EACH IC = +5V
E1 IS A DEC7430N
E2, E5, E8, E14 ARE DEC7474N
E3, E6, E9, E11, E12, E16, E17 ARE DEC7400N
E4, E7, E10, E13, E19 ARE DEC7460N
E15, E18 ARE DEC7410N
CAPACITORS ARE .01 MFD

PARTS LIST IS A-PL-M704-0-0

REVISIONS			
CHK	CHG NO.	REV.	
	7042	C	
	00001	D	
	00002	E	

DRN. M. Haller DATE 9-28-67
CHK'D DATE 9/28/67
ENG. DATE 9/28/67
PROD. 2 DATE

TRANSISTOR & DIODE CONVERSION CHART

DEC	EIA	DEC	EIA
DEC3009B	2N3009		
DEC6534B	MPS6534		
D664	IN3606		

digital EQUIPMENT CORPORATION
MAYNARD, MASSACHUSETTS

TITLE PLOTTER CONTROL M704

SIZE	CODE	NUMBER	REV.
D	CS	M704-0-1	E

PRINTED CIRCUIT REV. B

DEC FORM NO. DRD 101